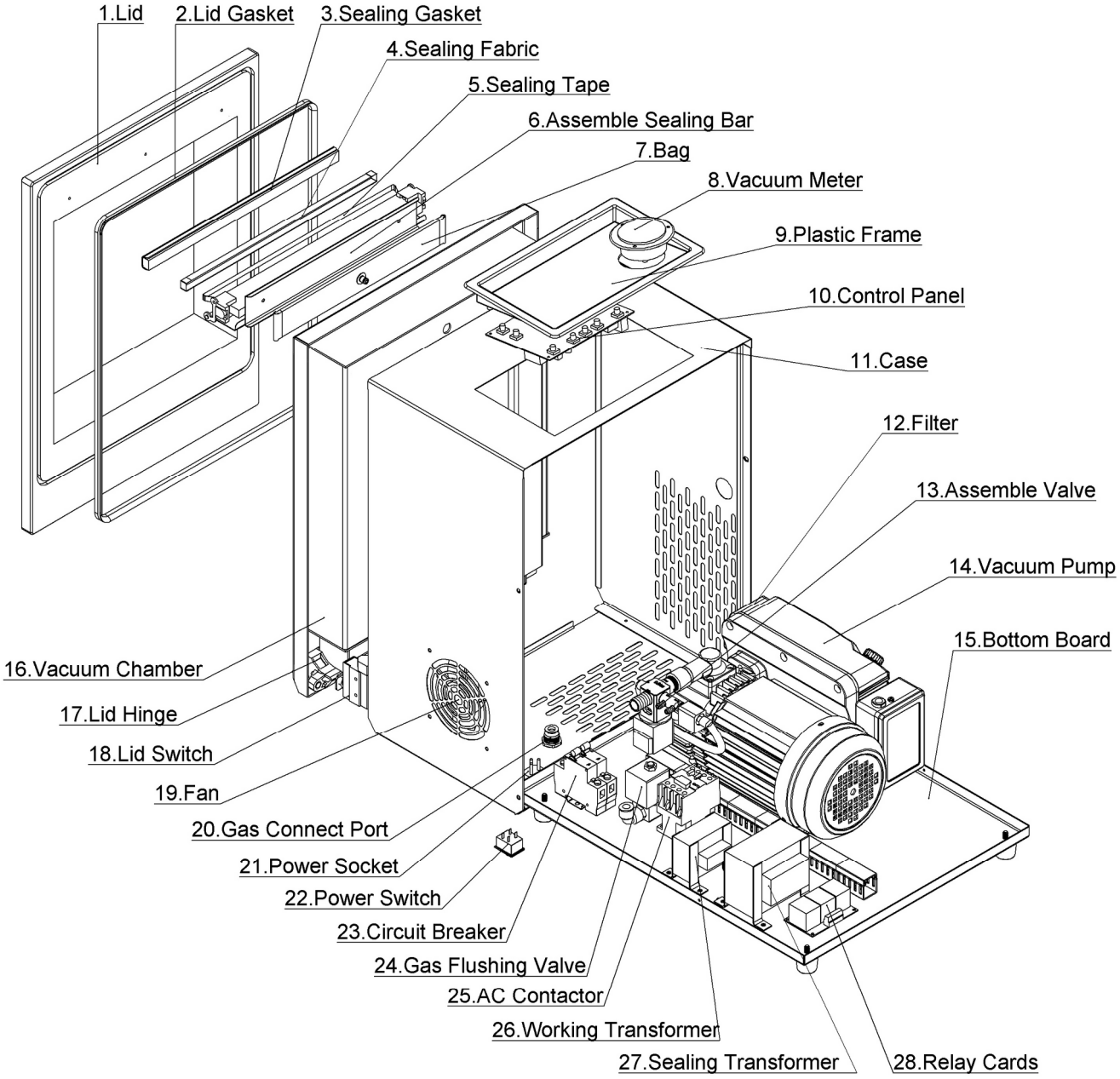EXPLODE VIEW OF IVP-350/MS, IVP-430PT/2,IVP-400/2F, IVP-450/A AND IVP-500/T TABLE TOP VACUUM PACKAGING MACHINE